HEAT TREATMENT AND FINAL FINISH

PHYSICAL PROPERTIES	
Y. P.	
T. S.	
EL. 2	
RED.	
BR.	
ROCK	
SCL.	

JAN. 2, 1935

REVISIONS

4	7-26-43			
5	10-8-44			

DRG. PERTAINS TO

D7431	CRADLE
D7371	MOUNT, TRIPOD, M1917A1
D7052	MT, TRIPOD, M.G
	CAL..30, M2
D39493	
E4158	
E4183	
D34914	
D30271	
D41488	MED. TANK, M7

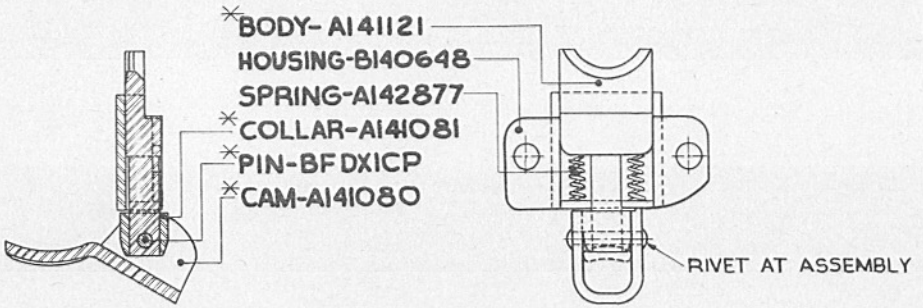

LOCK, PINTLE, GROUP ASSEMBLY

*WILL NOT BE ISSUED FOR FIELD MAINTENANCE EXCEPT AS COMPONENTS OF AUTHORIZED ASSEMBLIES.

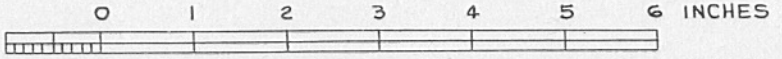

RETRACED FROM OLD TRACING WITHOUT CHANGE 9-29-43

B108986

TOLERANCE ON DIMENSIONS NOT OTHERWISE SPECIFIED
DECIMAL ±
FRACTIONAL ±
ANGULAR ±

DRAFTSMAN	TRACER	L'D'G DRAFTSMAN
R.F.D	HNS	
CHECKER		CHIEF DRAFTSMAN
J.F.		

SUBMITTED:

APPROVED BY ORDER OF THE CHIEF OF ORDNANCE

CAPT. ORD. DEPT., U. S. A.

ORDNANCE DEPT., U. S. A.

MADE AT ROCK ISLAND ARSENAL

A141080

HEAT TREATMENT & FINAL FINISH	PHYSICAL PROPERTIES					
	Y. P.		RED.		SCL.	
	T. S.		BR.			
	E. L. 2		ROCK			

JAN. 2, 1935

REVISIONS

14	7-12-43			
15	10-9-44			

DRG. PERTAINS TO	
D7135	MT., TRIPOD MG. CAL..50, M3
D33136	MT. AA. CAL..50, M2A1
D41488	MED. TANK, M7
B108986	MED. TANK, M7
D41283A	MED. TANK, M7

DRG. PERTAINS TO	
B108986	PINTLE LOCK
D7371	TRIPOD MT, M1917A1
B158753	
D7052	MT., TRIPOD M.G. CAL..30, M2
D38522	MT., PED, A.A.M.G. CAL..50, M2 A1
B108402	PINTLE LOCK

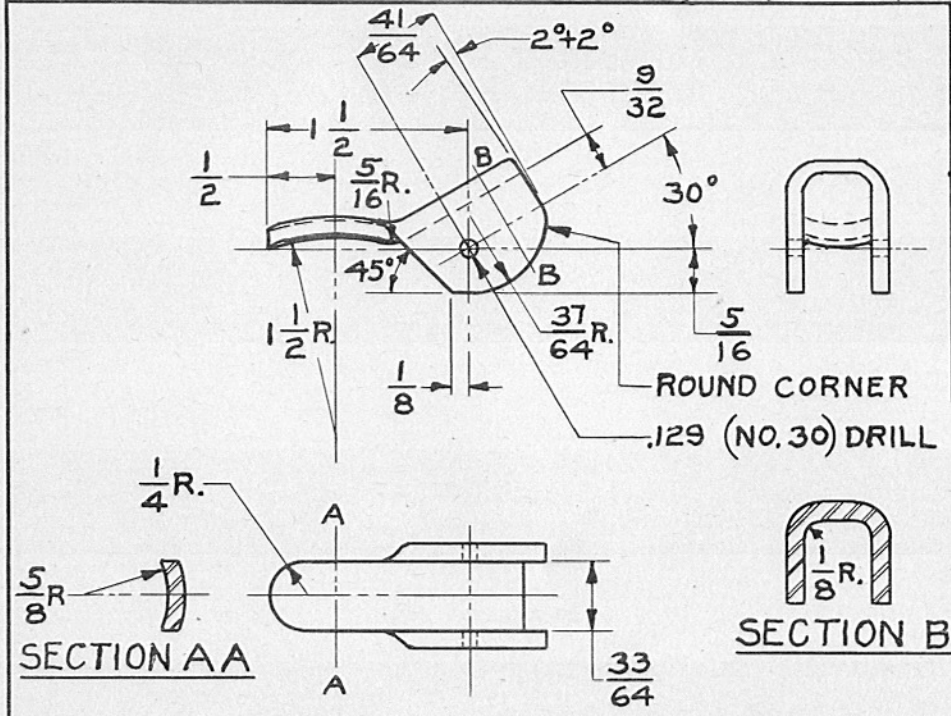

TOLERANCE ON DIMENSIONS NOT OTHERWISE SPECIFIED
DECIMAL ±—
FRACTIONAL ±1/64
ANGULAR ±—

DRAFTSMAN	TRACER	L'D'G DRAFTSMAN
R.F.D.	CMS	AMR
CHECKER	O.O.	CHIEF DRAFTSMAN

SUBMITTED:
A.M. Roe

APPROVED BY ORDER OF THE CHIEF OF ORDNANCE
Geo. La Hume
CAPT. ORD. DEPT., U. S. A.

ORDNANCE DEPT., U. S. A.

CAM, RELEASE, PINTLE LOCK

STEEL WD1010

1/8 THICK

SUPERSEDES OLD TRACING A141080 UNDER REVISION DATE OF 7-12-43.

NOTE: REMOVE ALL SHARP EDGES.

MANUFACTURING COMPONENT

SCALE 1/1

A141080

MADE AT ROCK ISLAND ARSENAL

HEAT TREATMENT & FINAL FINISH	PHYSICAL PROPERTIES						JAN. 2, 1935			
	Y. P.		RED.		SCL.		REVISIONS			
FINISH TYPE II-CLASS B	T. S.		BR.				1'	10-31-38	5'	5-[illegible]-42
	EL. 2		ROCK.				2'	2-18-41	6	7-[illegible]-42
							3'	4-2-41	7	7-25-42
							4'	3-31-42	8'	10-3-42

9	10-21-42
10	11-7-42
11	3-31-43
12	10-9-44

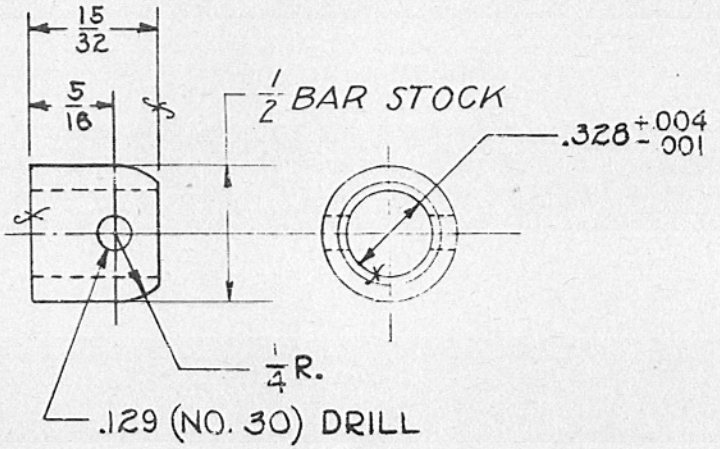

COLLAR, SPACING, PINTLE LOCK

STEEL WDX 1020 COLD ROLLED

MANUFACTURING COMPONENT

TOLERANCE ±0 1/64 ALLOWED ON ALL DIMENSIONS UNLESS OTHERWISE SPECIFIED.

A 141081

DRG. PERTAINS TO

A168746	
D7371[illegible]	TRIPOD MOUNT, M1917A1
B10840[illegible]	LOCK, PINTLE, ASSY
D7135	MT., TRIPOD, M.G., CAL. .50 M3
B108986	LOCK, PINTLE GROUP ASSY
A234-983	
D7052	MT. TRIPOD, M.G. CAL. .30 M2
B158733	

SYMBOL

KCC655

DRAFTSMAN	TRACER	L'D'G DRAFTSMAN
D.L.M.		R.J.L.
CHECKER		CHIEF DRAFTSMAN

SUBMITTED:-

CAPT., ORD. DEPT., U.S.A.

APPROVED BY ORDER OF THE CHIEF OF ORDNANCE:

LT. COL., ORD. DEPT., U.S.A.

ORDNANCE DEPT., U. S. A.

A141121

HEAT TREATMENT & FINAL FINISH	PHYSICAL PROPERTIES					
HEAT TREAT PHOSPHATE BLACK AFTER ASSEMBLY.	Y. P.		RED.		SCL.	—
	T. S.		BR.			
	EL. 2		ROCK C.	30-35		

JAN. 2, 1935

REVISIONS			
1'	10-27-36	5'	4-10-41
2'	11-1-38	6³	8-27-41
3'	1-22-41	7'	9-13-41
4'	2-24-41	8⁴	9-20-41
9²	10-7-41		
10'	10-24-41		
11'	11-27-41		
12²	5-21-42		
13⁴	10-8-42		
14⁴	2-3-43		
15	7-12-43		

DRG. PERTAINS TO	
B108986	PINTLE LOCK
D7371	TRIPOD MOUNT, M1917A1
D7052	MT., TRIPOD, M.G., CAL. .30, M2
B108986	MED. TANK M7

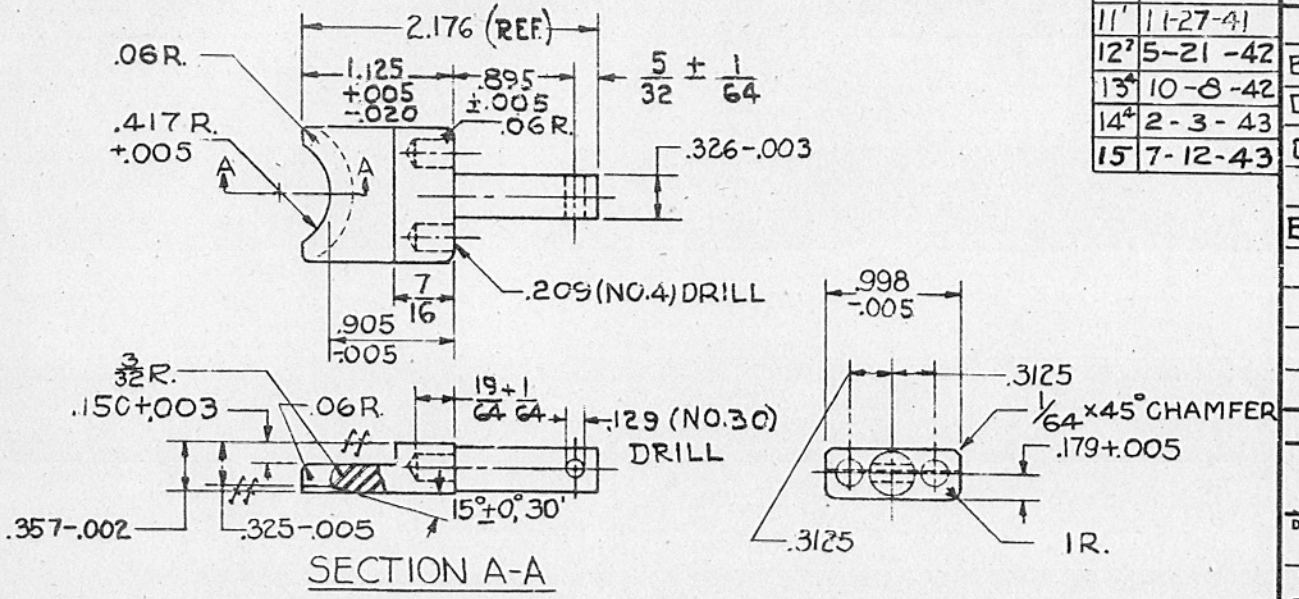

SECTION A-A

BODY, PINTLE LOCK

STEEL-WD X 1335

FINISH f

MANUFACTURING COMPONENT

TOLERANCE +.010 -.010 ALLOWED ON ALL DIMENSIONS UNLESS OTHERWISE SPECIFIED.

SCALE 1/1

A141121

SYMBOL

OLB 600

DRAFTSMAN	TRACER	L'D'G DRAFTSMAN
R.F.D.		RJL
CHECKER		CHIEF DRAFTSMAN

SUBMITTED:-

CAPT., ORD. DEPT., U.S.A.

APPROVED BY ORDER OF THE CHIEF OF ORDNANCE:

LT. COL., ORD. DEPT., U.S.A.

ORDNANCE DEPT., U. S. A

A142877

HEAT TREATMENT & FINAL FINISH	PHYSICAL PROPERTIES					
PHOSPHATE BLACK.	Y. P.		RED.		SCL.	
	T. S.		BR.			
	EL. 2		ROCK.			

JAN. 2, 1935

REVISIONS

1	11-1-38	5'	7-25-42
2²	10-19-39	6'	11-7-42
3'	1-25-41		
4'	9-20-41		

DRG. PERTAINS TO

B108986	PINTLE LOCK
D7371	TRIPOD MOUNT M1917A1
D7052	MT., TRIPOD, M.G.
	CAL. .30, M2

SPRING, HELICAL

SPRING STEEL WIRE - W.D. 1085 (SPECIAL) CLASS A

OUTSIDE DIAM. SOLID, NOT MORE THAN---.2
INSIDE DIAM. FREE, NOT LESS THAN----.125
ASSEMBLED HEIGHT----------.75
LOAD AT ASSEMBLED HEIGHT--------3.00 LB. + 10%
SOLID HEIGHT, NOT MORE THAN------.43
DIAM. OF WIRE (APPROX.)----------.033
FREE HEIGHT (APPROX.)----------.875
NUMBER OF COILS (APPROX.)--------13
ENDS CLOSED AND GROUND FLAT

SYMBOL

PAS 665

DRAFTSMAN	TRACER	L'D'G DRAFTSMAN
F.W.S.		
CHECKER		CHIEF DRAFTSMAN
R.J.L.	W.B.W.	

SUBMITTED:-
[signature]
CAPT., ORD. DEPT., U.S.A.

APPROVED BY ORDER OF THE CHIEF OF ORDNANCE:

LT. COL., ORD. DEPT., U.S.A.

A142877

ORDNANCE DEPT., U. S. A.

HEAT TREATMENT AND FINAL FINISH

PHYSICAL PROPERTIES	
Y. P.	
T. S.	
EL. 2	
RED.	
BR.	
ROCK	
SCL.	

JAN. 2, 1935

REVISIONS

4	7-26-43			
5	10-8-44			

DRG. PERTAINS TO

D7431	CRADLE
D7371	MOUNT, TRIPOD, M1917A1
D7052	MT, TRIPOD, M.G
	CAL..30, M2
D39493	
E4158	
E4183	
D34914	
D30271	
D41488	MED. TANK, M7

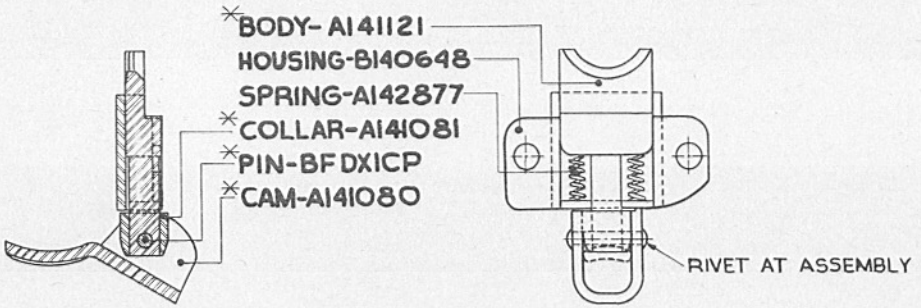

LOCK, PINTLE, GROUP ASSEMBLY

*WILL NOT BE ISSUED FOR FIELD MAINTENANCE EXCEPT AS COMPONENTS OF AUTHORIZED ASSEMBLIES.

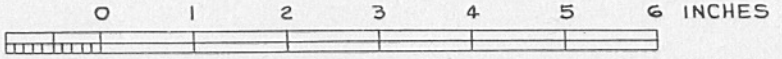

RETRACED FROM OLD TRACING WITHOUT CHANGE 9-29-43

B108986

TOLERANCE ON DIMENSIONS NOT OTHERWISE SPECIFIED
DECIMAL ±
FRACTIONAL ±
ANGULAR ±

DRAFTSMAN	TRACER	L'D'G DRAFTSMAN
R.F.D	HNS	
CHECKER		CHIEF DRAFTSMAN
J.F.		

SUBMITTED:

APPROVED BY ORDER OF THE CHIEF OF ORDNANCE

CAPT. ORD. DEPT., U. S. A.

ORDNANCE DEPT., U. S. A.

MADE AT ROCK ISLAND ARSENAL

HEAT TREATMENT AND FINAL FINISH

PHOSPHATE BLACK

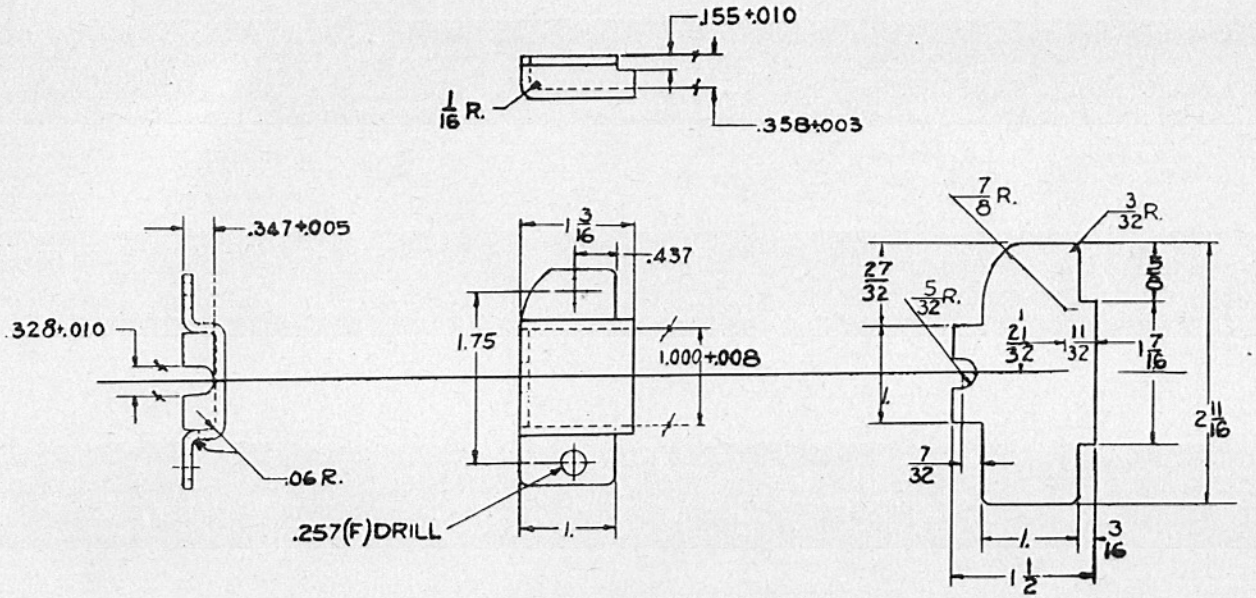

HOUSING, PINTLE LOCK (C) B140648

STEEL WD1035

.093 (NO. 13 U.S. GAGE) THICK

DEVELOPMENT

TOLERANCE $^{+.005}_{-.005}$ ALLOWED ON ALL DIMENSIONS UNLESS OTHERWISE SPECIFIED

B140648

JAN. 2, 1935

REVISIONS

1'	11-1-38		
2'	1-27-41		
3²	10-8-42		

DRG. PERTAINS TO

B108986	PINTLE LOCK
D7371	MOUNT, TRIPOD, M1917A1
D7052	MOUNT, TRIPOD, MACH. GUN, CAL. .30, M2
B108986	LTTX.M5

SYMBOL

RBH 726

DRAFTSMAN	TRACER	L'YR DRAFTSMAN
R.J.L.		R.J.L.
CHECKER		CHIEF DRAFTSMAN
R.J.L.		

SUBMITTED:

CAPT., ORD. DEPT. U.S.A.

APPROVED BY ORDER OF THE CHIEF OF ORDNANCE:

LT. COL., ORD. DEPT. U.S.A.

ORDNANCE DEPT. U.S.A.

PIN, STRAIGHT, STEEL — BFDXI

STANDARD

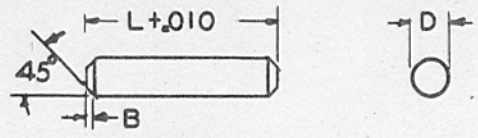

COMMERCIAL DRILL ROD

D	DIAM. OF PIN	NOM.	1/16	3/32	1/8	5/32	3/16	
		MAX.	.0630	.0942	.1255	.1567	.1880	
		MIN.	.0620	.0932	.1245	.1557	.1870	
B	CHAMFER		.010	.010	.010	1/64	1/64	

L	LENGTH	PIECEMARK					
	1/8	BFDXIAA					
	3/16	BFDXIAB					
	1/4	BFDXIAC	BFDXIBC				
	5/16	BFDXIAD	BFDXIBD				
	3/8	BFDXIAE	BFDXIBE	BFDXICE			
	7/16	BFDXIAF	BFDXIBF	BFDXICF			
	1/2	BFDXIAG	BFDXIBG	BFDXICG	BFDXIDG		
	9/16	BFDXIAH	BFDXIBH	BFDXICH	BFDXIDH		
	5/8	BFDXIAK	BFDXIBK	BFDXICK	BFDXIDK	BFDXIEK	
	11/16		BFDXIBL	BFDXICL	BFDXIDL	BFDXIEL	
	3/4		BFDXIBM	BFDXICM	BFDXIDM	BFDXIEM	
	13/16		BFDXIBN	BFDXICN	BFDXIDN	BFDXIEN	
	7/8		BFDXIBP	BFDXICP	BFDXIDP	BFDXIEP	
	15/16			BFDXICQ	BFDXIDQ	BFDXIEQ	
	1.			BFDXICR	BFDXIDR	BFDXIER	
	1-1/8			BFDXICS	BFDXIDS	BFDXIES	
	1-1/4				BFDXIDT	BFDXIET	
	1-3/8				BFDXIDU	BFDXIEU	
	1-1/2					BFDXIEW	
	1-5/8					BFDXIEX	
	1-3/4					BFDXIEZ	
	SIZE OF HOLE	DRILL 1/16 .0625	DRILL 3/32 .0937	REAMER .1240 +.0005	REAMER .1540 +.0005	REAMER .1870 +.0005	

MATERIAL FOR PIN: DRILL ROD, COMMERCIAL.

DIMENSIONS IN INCHES

NOTE: PINS SHALL BE SPEC. BY TYPE, NOM. DIAM, LENGTH & PC-MK.
EXAMPLE: PIN, STRAIGHT 3/16 X 1 - BFDXIER

NOTE: DRILLS PRESCRIBED MUST BE USED FOR SIZING HOLE AFTER DRILLING HOLE SEVERAL SIZES SMALLER. DIAMETER OF PINS AND DIAMETER OF DRILL OR REAMER TO BE USED MUST BE SELECTED TO OBTAIN .0005-.001" DRIVE FIT IN HOLE.

③ 10-31-42

ORDNANCE STANDARD (ORD. DESIGN) DATE APPROVED 1-31-34

STANDARD BOOK NO. 2

SUPERSEDES OLD TRACING BFDXI, UNDER REVISION DATE OF 10-31-42